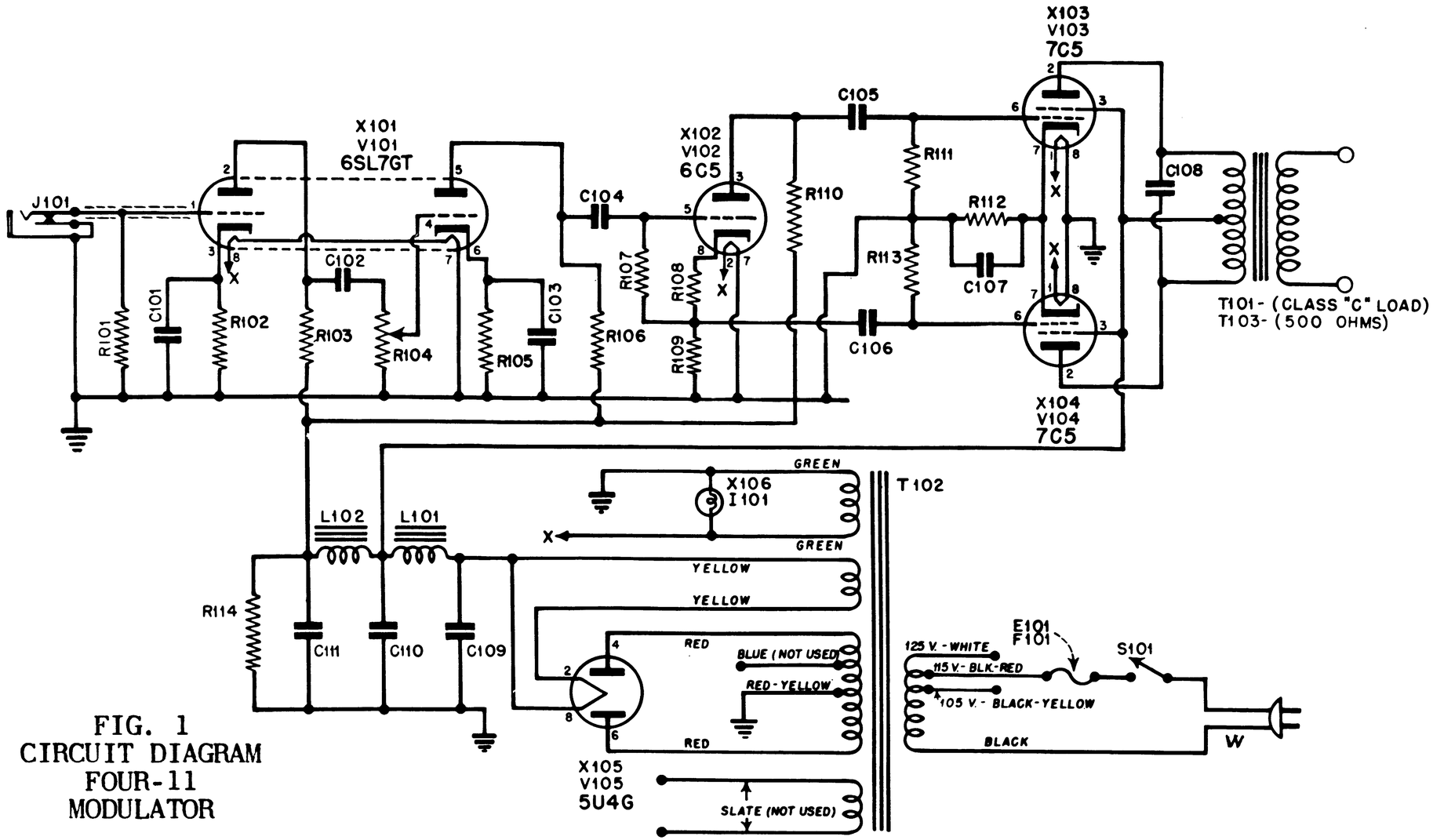

FIG. 1
CIRCUIT DIAGRAM
FOUR-11
MODULATOR