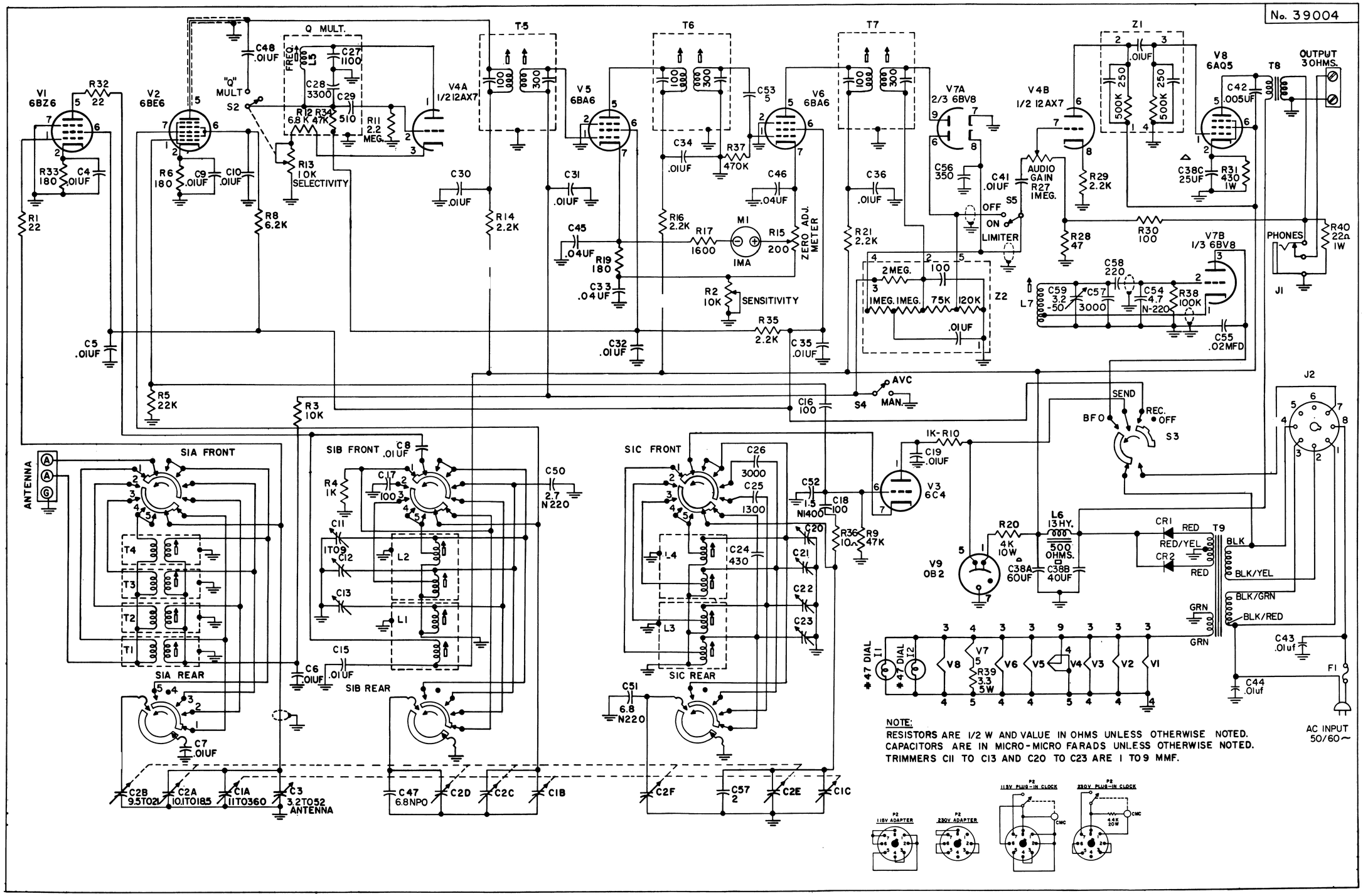

Figure 10. Hammarlund HQ-100A Receiver, Schematic Diagram