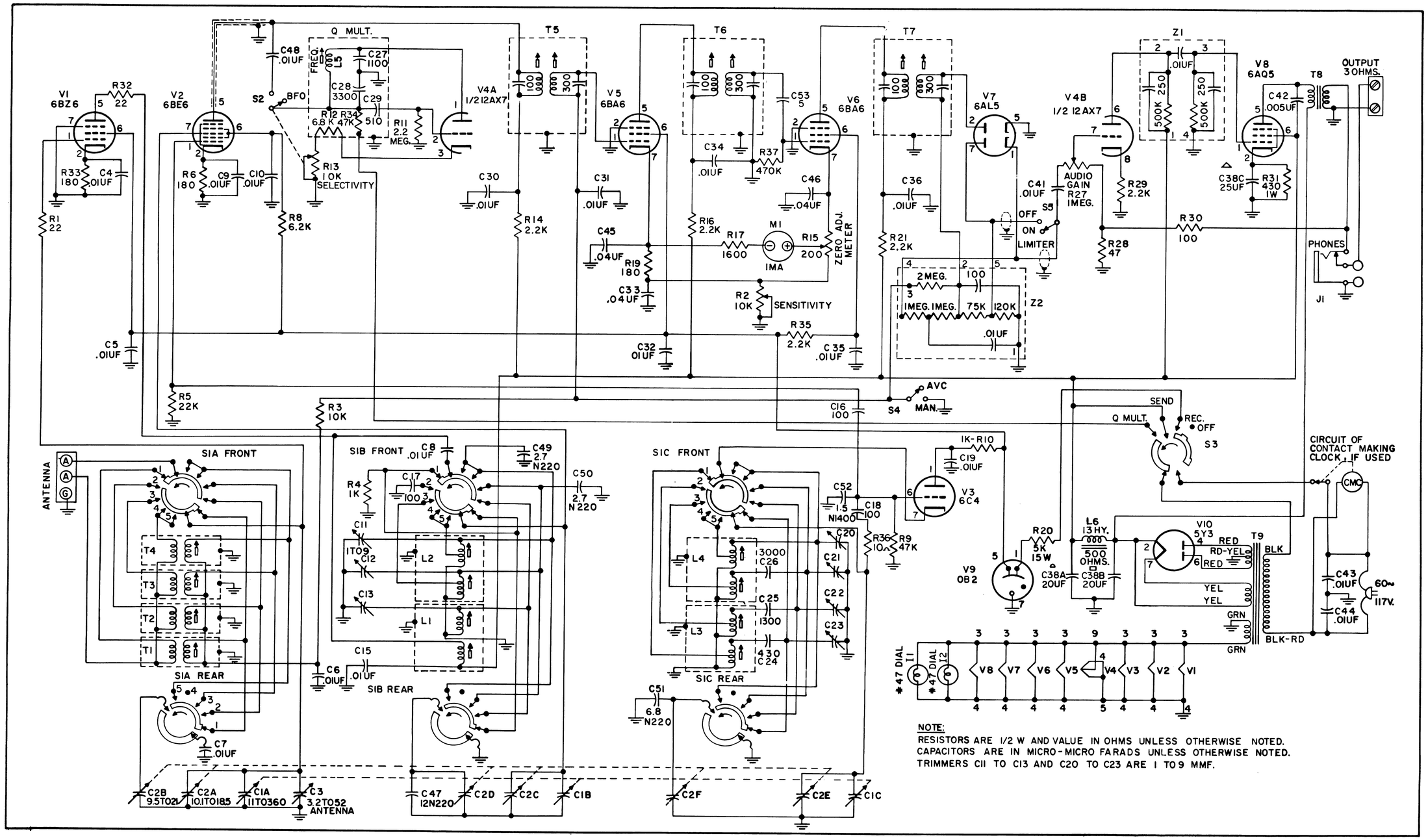

Figure 10. Hammarlund HQ-100 Receiver, Schematic Diagram