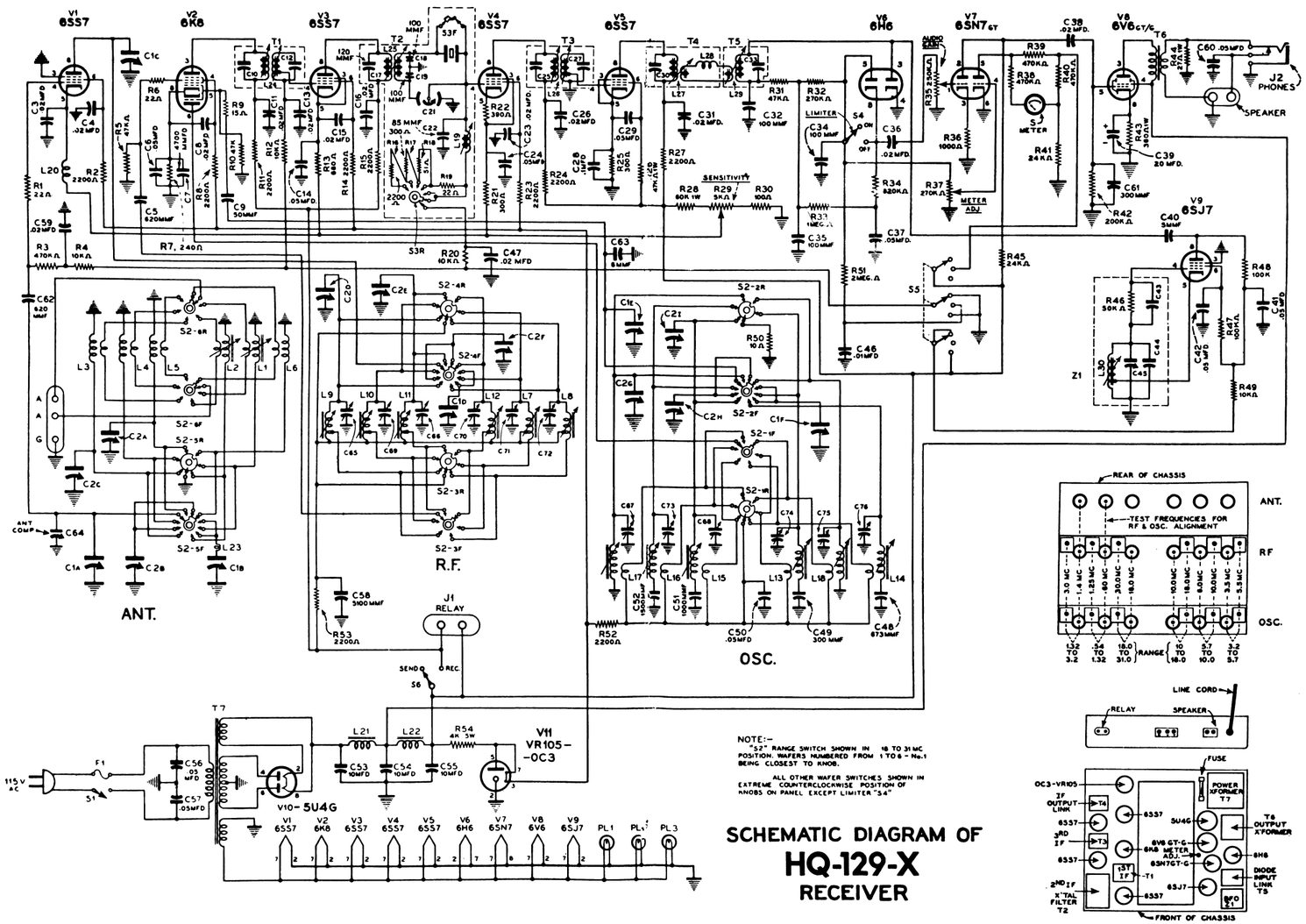

SCHEMATIC DIAGRAM OF
HQ-129-X
RECEIVER

Fig. 8—Circuit diagram.