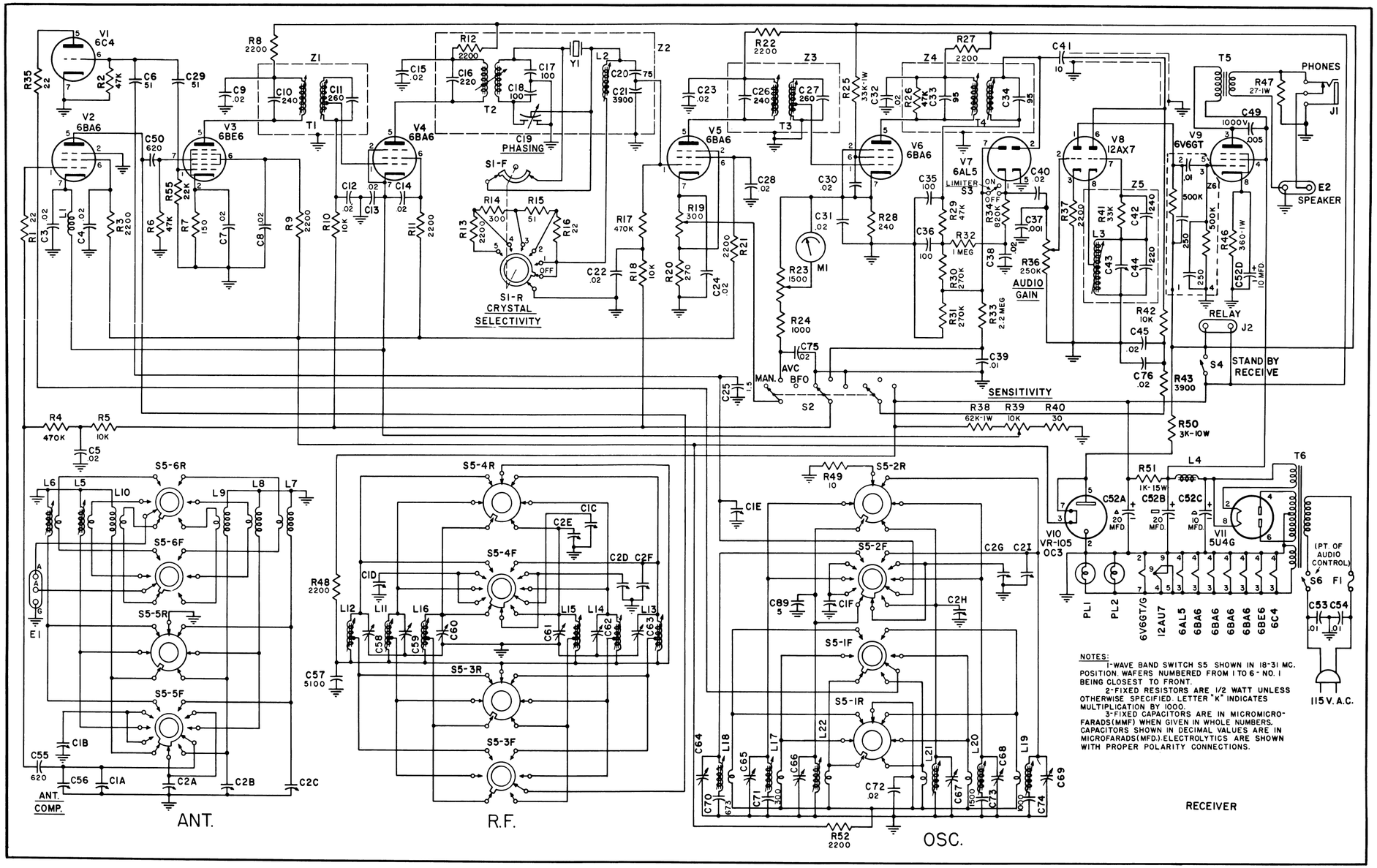

NOTES:
1-WAVE BAND SWITCH S5 SHOWN IN 18-31 MC. POSITION. WAFERS NUMBERED FROM 1 TO 6 - NO. 1 BEING CLOSEST TO FRONT.
2-FIXED RESISTORS ARE 1/2 WATT UNLESS OTHERWISE SPECIFIED. LETTER "K" INDICATES MULTIPLICATION BY 1000.
3-FIXED CAPACITORS ARE IN MICROMICROFARADS(MMF) WHEN GIVEN IN WHOLE NUMBERS. CAPACITORS SHOWN IN DECIMAL VALUES ARE IN MICROFARADS(MFD.). ELECTROLYTICS ARE SHOWN WITH PROPER POLARITY CONNECTIONS.

Figure 7. Hammarlund HQ-140XA, Schematic Diagram