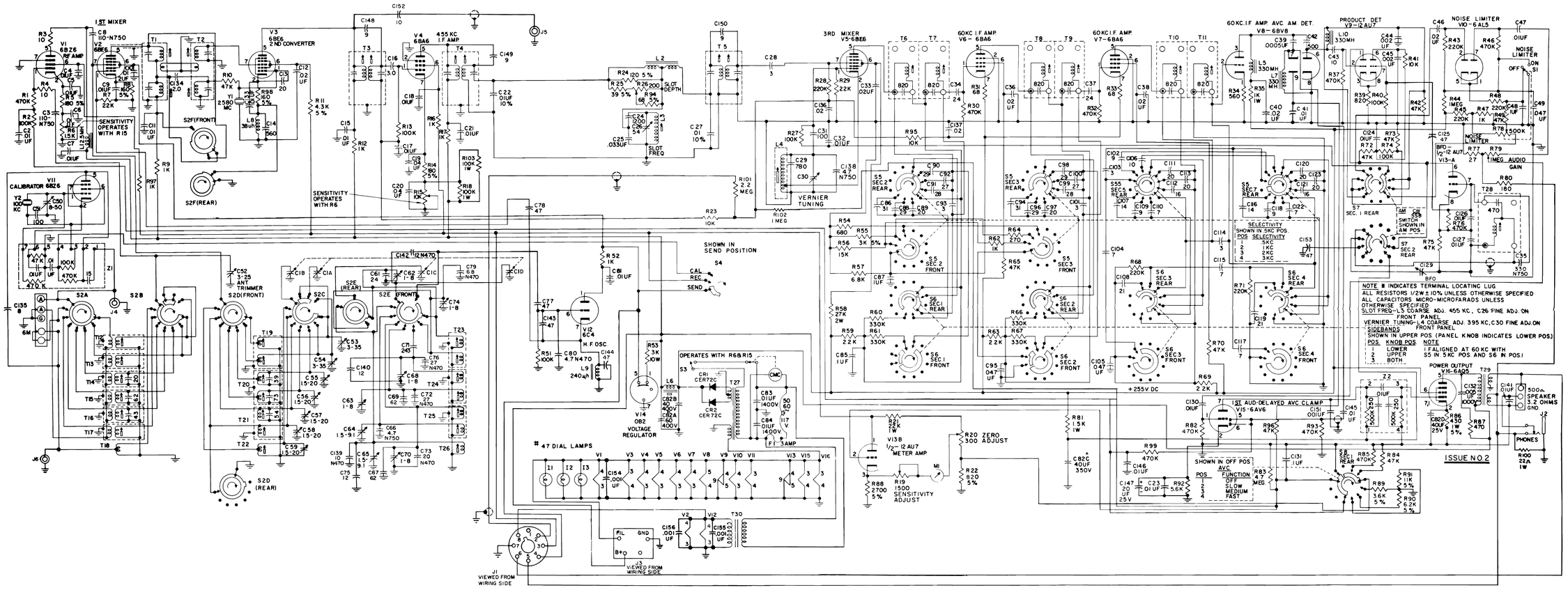

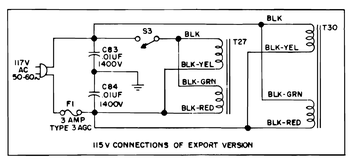

115V CONNECTIONS OF EXPORT VERSION

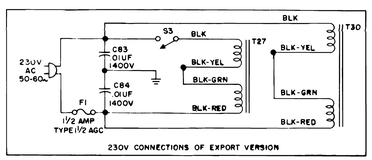

230V CONNECTIONS OF EXPORT VERSION

SCHEMATIC DIAGRAM - HQ-170A