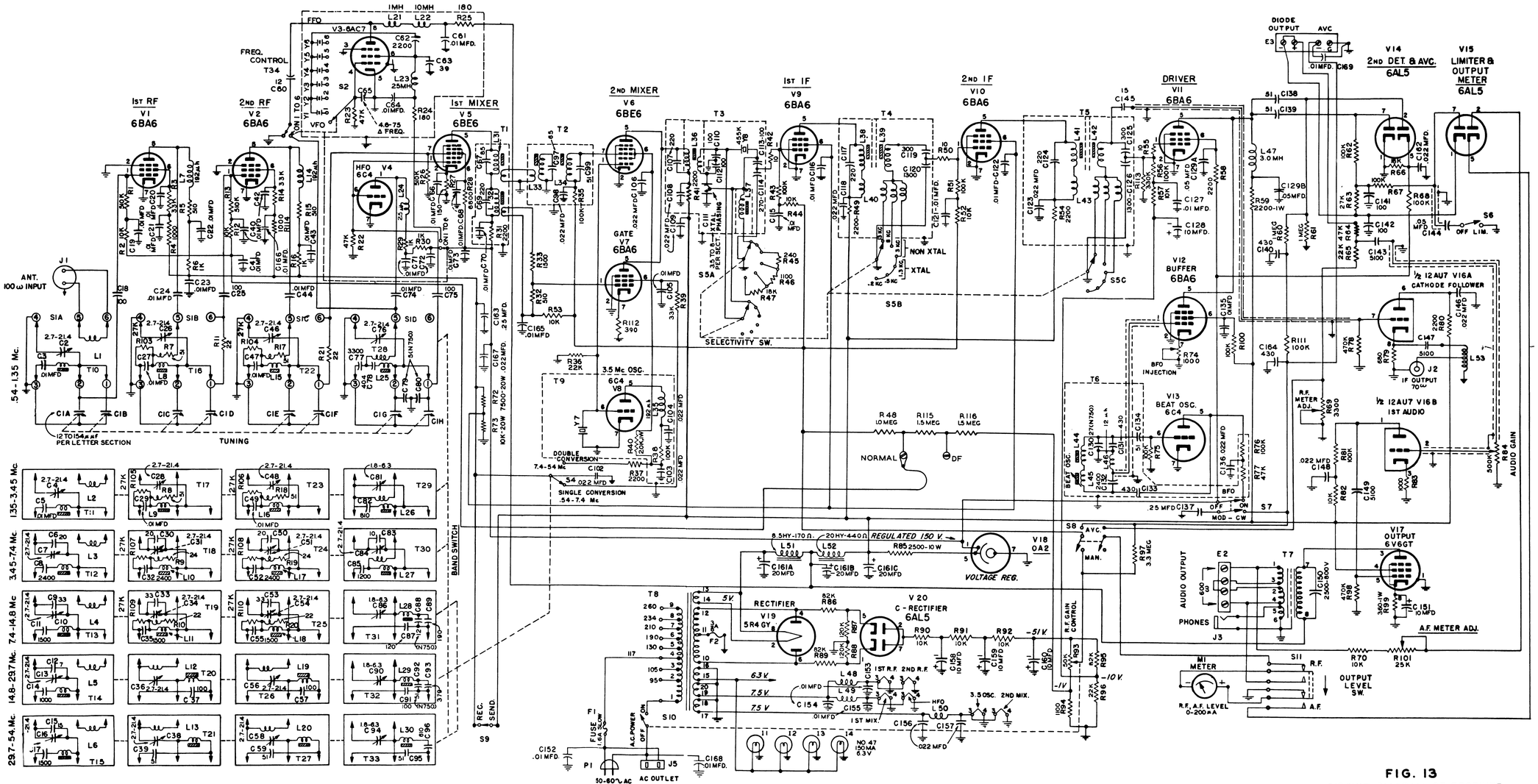

FIG. 13
CIRCUIT DIAGRAM OF RECEIVER